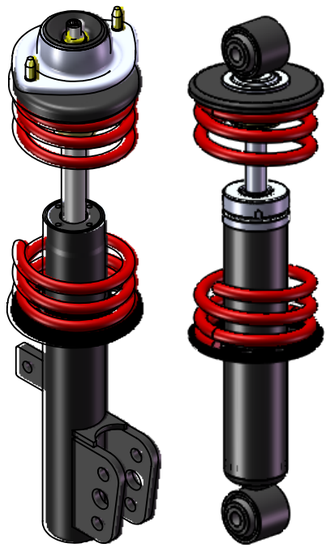

soben

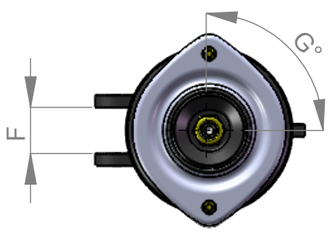

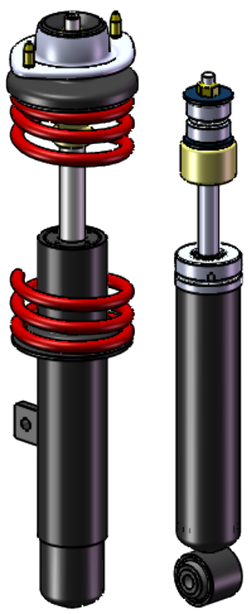

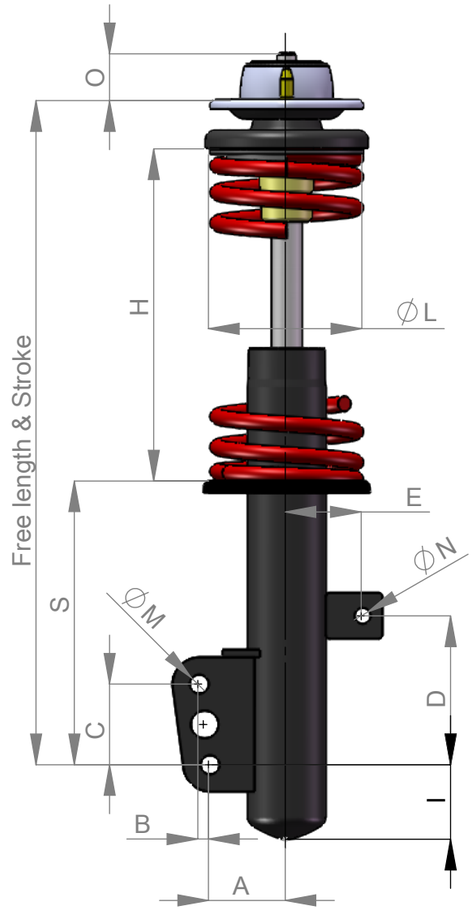

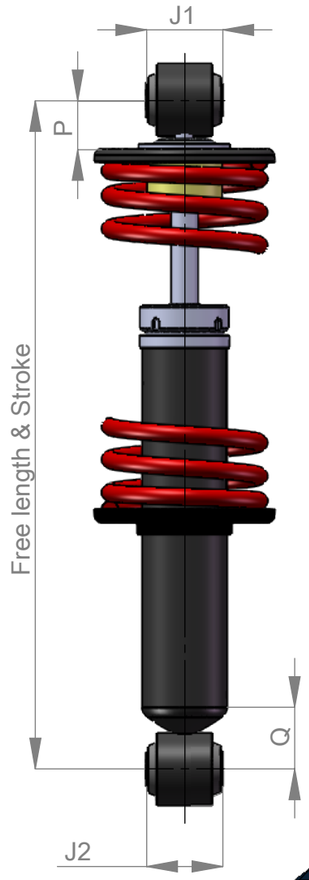

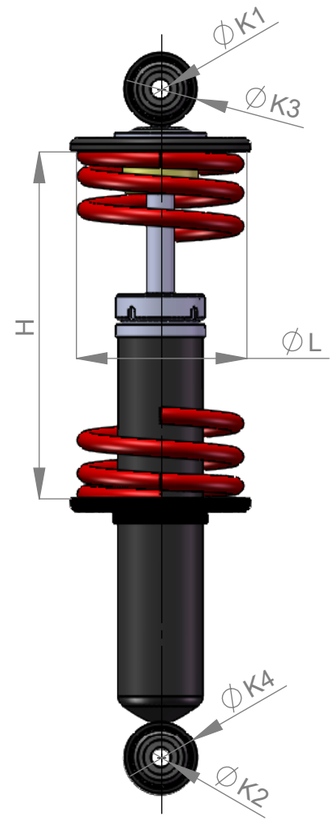

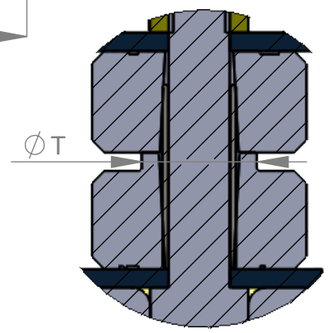

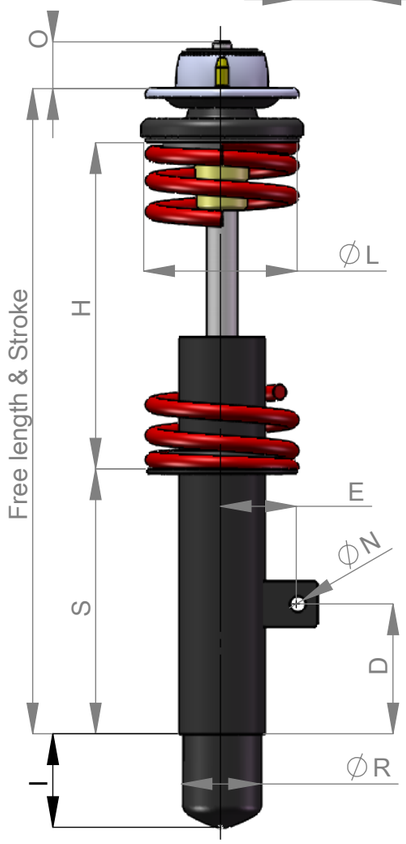

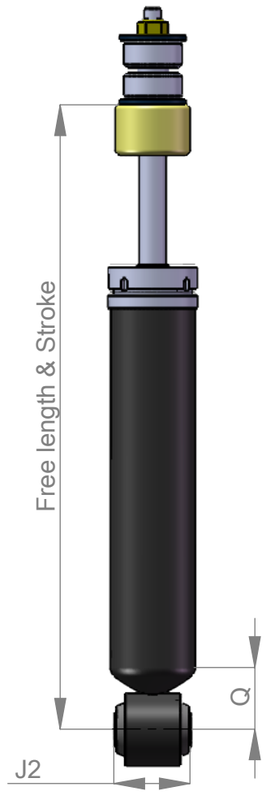

Your space :

VEHICLE KINEMATIC		
MASS AXLE		Kg
UNSPRUNG MASS		Kg
RATIO KINEMATIC		
TIRE SIZE		
APPLICATION (STREET, OFF-ROAD, TRACK...)		
GEOMETRY		
A		mm
B		mm
C		mm
D		mm
E		mm
F		mm
G		°
H		mm
I		mm
J1		mm
J2		mm
K1 and K3		mm
K2 and K4		mm
L		mm
M		mm
N		mm
O		mm
P		mm
Q		mm
R		mm
S		mm
T		mm
DIMENSIONS		
FREE LENGTH		mm
COMPRESS LENGTH		mm
STATIC LENGTH		mm
OPTIONAL		
HYDRAULIC BUMP STOP		
ROD COVER		
CORROSION RESISTANCE		Hour
MINIMUM TEMPERATURE		°C
MAXIMUM TEMPERATURE		°C
SHOCK ABSORBER ABLE TO BE OPEN		
FLAT MOUNTING		
WITH SRPING		
WITH BUSHING		
WITH BALL JOINT		

DAMPING LAW : Force vs Speed

	Compression							0	Rebound						
SPEED (m/s)	-2	-1	-0.5	-0.3	-0.2	-0.1	-0.05	0	0.05	0.1	0.2	0.3	0.5	1	2
Force (daN)															